LEFOO

LFG203

Indoor Carbon Dioxide Transmitter

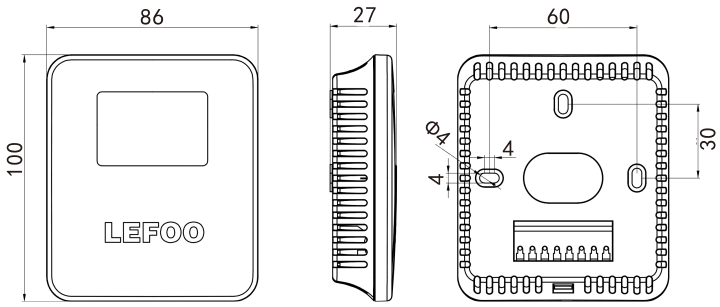

Dimension in : mm

LFG203 Indoor Carbon Dioxide Transmitter, based on principle the different gases have different absorption capabilities or infrared light in a specific band, it measures the concentration of the measured gas by measuring the degree of infrared light absorption. Compared with electrochemical sensors it has long life and stability, Imported high-performance NDIR sensor is used for CO concentration measurement, with rapid response stable performance and high accuracy wide power supply range, small size, easy installation, ideal for indoor carbon dioxide measurement. It is widely used to measure the CO2 concentration in environments such as home. office, factory floors, library warehouses, etc

LFG203Series Order Ref NO

LFG203 - 1 - V10 - D

A B C

A Range	B Output	C Display
1=2000ppm	V0=0~5V	D=With display
2=5000ppm	V10=0~10V	N=No display
	A4=4~20mA	
	RS=RS485/Modbus	

Specification

General	Value			
Output Mode	4~20mA(3-wire)	0~5V(3-wire)	0~10V(3-wire)	RS485(4-wire)
Working Voltage	10-30Vdc	10-30Vdc	16-30Vdc	10-30Vdc
Sensor	NDIR sensor with ABC self-calibration			
Average Current	<45mA			
Working Temperature	0°C~50°C			
Working Humidity	0-80%RH(no condensation)			
Measure Concentration	0-2000PPM/0-5000PPM			
Accuracy	±(40PPm+ 3%MV)ppm			
Response Time	2min			
Protection Level	Ip30			
Service Life	>5 years			